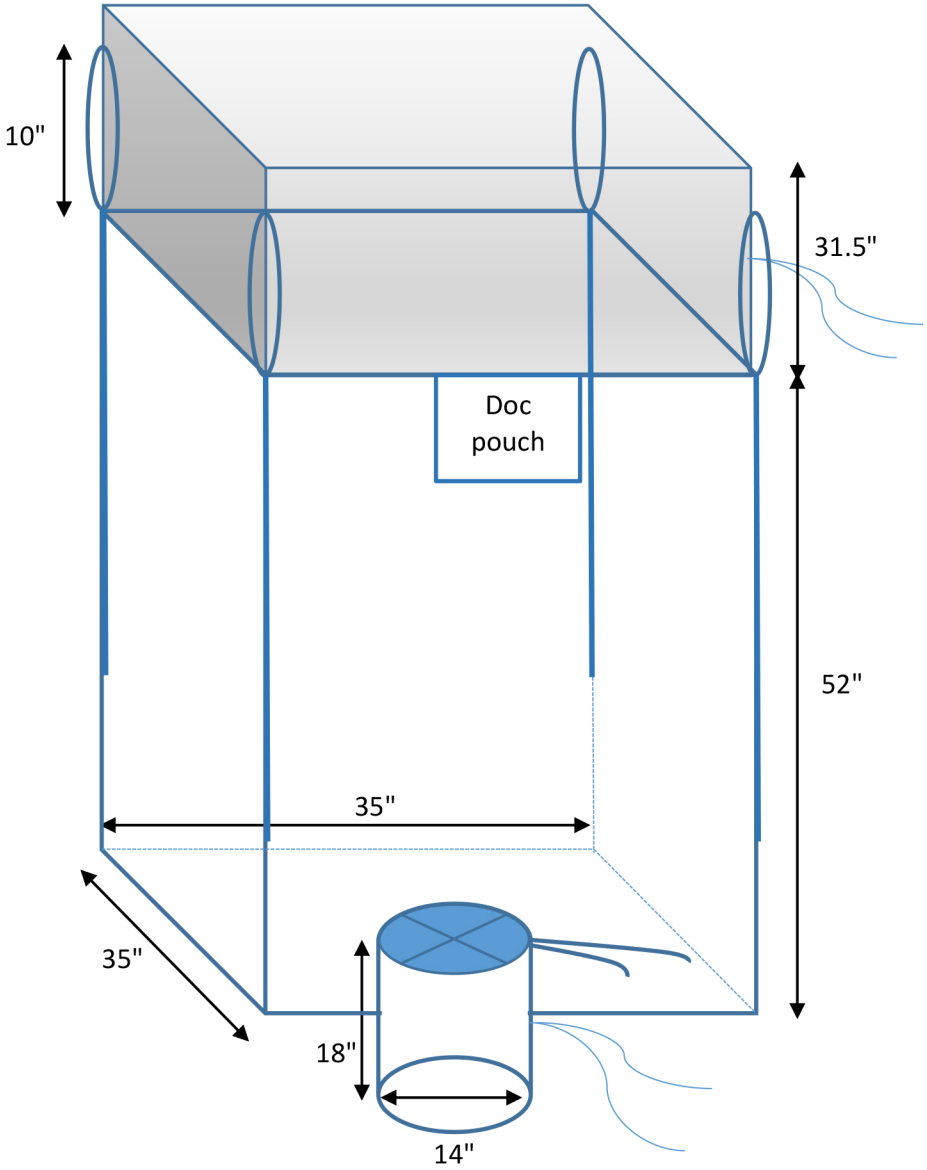

Specification	
Bag Dimension:	35x35x52"
SWL/SF:	2500lbs (1135kg) / 5:1
Bag construction:	U-Panel
Body Fabric:	4.7+0.88oz (160+30gsm) Coated White fabric
Duffle Top:	31.5” long
Duffle Fabric:	1.90 + 0.59oz (65+20gsm) coated
Duffle tie:	Flat pp tie tape
Bottom Spout:	dia 14 x 18" long
Bottom Spout Fabric:	1.90 + 0.59oz (65+20gsm) coated
Bottom Spout tie:	Flat pp tie tape
Bottom Closure:	Star closure
Bottom Closure tie:	Flat pp tie tape
Lifting Loops:	4 corner loops x 10" free height x 2" width
Material:	PP Webbing / White Colour
Sift proof seams:	No
Document pouch:	Standard pouch
Seams:	Double Chain - White/Blue